Wi-Fi Weather Station

Operation Manual

Model: GW1002

Thank you for purchasing this GW1002 Wi-Fi Weather Station, with wireless anemometer, self-emptying rain collector, temperature and humidity sensor.

This manual will guide you, step-by-step, through setting up your weather station and console, and understanding the operation of your weather station.

Note: The mounting pole for wireless anemometer is **not included**.

1 Table of Contents

2 Unpacking

Open your weather station box and inspect that the contents are intact (nothing broken) and complete (nothing missing). Inside you should find the following:

QTY	Item Description
1	USB Wi-Fi Gateway
1	Cable clip
1	Wireless anemometer body with built-in: Wind speed/direction sensor, Light and UV sensor, Solar panel
1	Wind speed cups (to be attached to anemometer sensor body)
1	Wind vane (to be attached to anemometer sensor body)
1	Outdoor temperature and humidity sensor
1	Rain gauge sensor
2	U-Bolts set for mounting on a pole (2pcs/set)
2	Threaded nuts for U-Bolts set (M5 size) (4pcs/set)
2	Metal mounting plate set to be used with U-Bolts (1pcs/set)
1	Stainless steel tube (for mounting the rain gauge sensor)
1	Stainless steel filter for rain gauge collector
1	Mini wrench for M5 bolts
1	User manual (this manual)

Table 1: Package content

If any component is missing from the package, or broken, please contact our Customer Service department to resolve the issue.

Note: The gateway must be plugged into a USB (2.0 or later) port for its power supply. You may want to use a USB extension cable (USB type A - Male straight to female straight; not included) to allow for easier placement.

Note: Batteries for the wireless anemometer and the rain gauge sensor are not included. You will need 1 AA size battery, alkaline or Lithium (Lithium recommended for the rain sensor) type for each unit.

Note: There are two sets of U-bolts in the box, one is for the wireless anemometer sensor and the other one is for the rain gauge sensor. There's a short stainless-steel tube included for the rain gauge sensor installation.

Note: The rain gauge can also be mounted to a surface using two screws, so the included stainless-steel tube is not always necessary!

3 Overview

3.1 USB Gateway

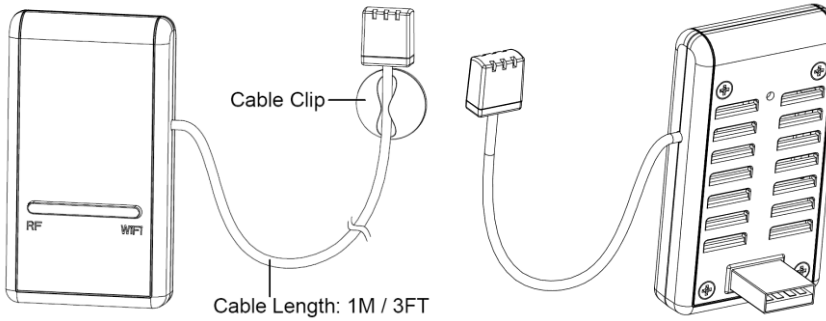

Figure 1: Wi-Fi Gateway

3.2 Wireless anemometer assembly with solar sensors

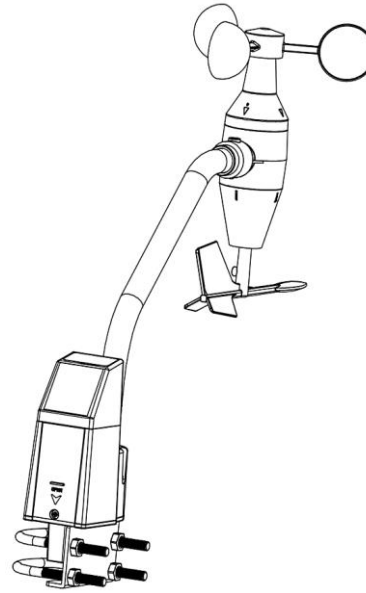

Figure 2: Wireless anemometer, wind-vane, solar sensor

3.3 Rain Sensor

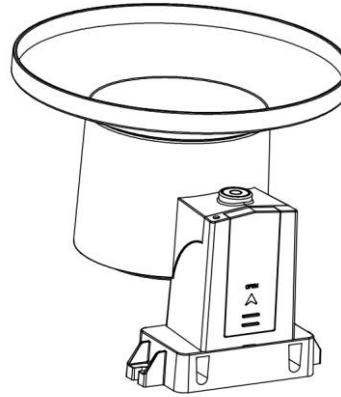

Figure 3: Self emptying rain gauge

3.4 Outdoor temperature and humidity sensor

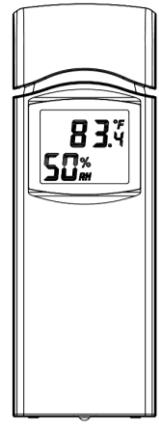

Figure 4: Outdoor temperature and humidity sensor display

3.5 Features

USB Wi-Fi Gateway

- Built-in temperature, humidity and atmospheric pressure sensors (cabled probe attached).
- Collects sensor data from various supported wireless sensors.
  - Additional/optional sensors supported:
    - One WH57 lightning sensor
    - Up to 8 WH31 multi-channel temperature and humidity sensors
    - Up to 8 WH51 soil moisture sensors
    - Up to 4 WH41 PM2.5 air quality sensors
    - Up to 4 WH55 Water leak sensors
    - Future sensors (to be developed), such as: water temp, soil temp
- Calculates dew point for outdoor sensor (cloud upload supported)
- Pushes sensor data to cloud weather services:
  - https://www.ecowitt.net
  - https://www.wunderground.com
  - https://www.weathercloud.com/
  - https://www.wow.com
  - Custom sites using either Wunderground or Ecowitt protocol. Contact the Customer Support department for assistance.
- Mobile application (WS View)
  - View collected live data.
  - Manage sensor calibration setup.
  - Manage sensor selection.
- Data storage service on Ecowitt server: https://ecowitt.net
  - Stores data for past year days at 5-minute intervals
  - Stores data for past 2 years at 30-minute intervals

Outdoor Sensors

- Outdoor temperature and humidity.

- Wind speed, gust speed, and wind direction.
- Rainfall rate and totals for day, week, month, and year.
- Solar light intensity and UV index

Note: All the optional sensors can all be found on our website: http://www.ecowitt.com. Make sure to select the model of the units with the same RF frequency as your gateway (the frequency is different for various countries because of regulations).

Note: Only sensor data supported by each specific service will be uploaded. For example, the Wunderground only accepts outdoor sensor data, therefore it will not display the following sensor data on their website:

- Indoor temperature and humidity (from the GW1000 built-in 3-in-1 sensor)
- Multi-channel temperature and humidity (from the WH31 sensor)
- Soil moisture (from the WH51 sensor)
- PM2.5 data (from the WH41 sensor).
- Lightning data (from the WH57 sensor)
- Water leakage condition (from the WH55 Sensor)

To view and record all the sensors data remotely, we recommend you to use the Ecowitt server.

4 Set up Guide

Before you start, you will need a Philips screwdriver (size PH0, not provided) and find the wrench (size M5) included in package.

Note: We suggest you assemble all components of the weather station, including (optional) console in one location so you can easily test functionality. After testing, place the outdoor sensors in the desired location. Note, however, that movement during assembly, and movement after assembly can cause the rain sensor to "falsely" register rain. It is possible to reset the rain total to 0 via WS View app.

Attention:

- Follow the suggested order for battery installation (outdoor sensor(s) first, indoor sensor(s) second, optional console last).
- Ensure batteries are installed with correct polarity (+/-).
- Only use new batteries for all battery-operated sensors.
- **Never** use rechargeable batteries of any kind, except for the anemometer and rain gauge, where you can optionally use low-self-discharge type rechargeable batteries.
- If outdoor temperature may go below 32 F or 0 C for prolonged periods, Lithium based batteries are suggested over alkaline type batteries for any outdoor sensor.

4.1 Site Survey

Location of various sensors is paramount to good data collection. Abbreviated instructions follow, but for a detailed reference, see: https://www.weather.gov/media/epz/mesonet/CWOP-Siting.pdf.

Perform a site survey before installing the weather station. Consider the following:

Anemometer

- Ideally mounted at least 32 feet, or 10 meters above ground level.
- Try to make the anemometer the highest object around. 7 feet, or 2.75 meters) or more above the surrounding obstructions is best.

Rain Gauge

- Ideally mounted at a height of 4 to 6 feet, or 1.5 to 2 meters above the ground.
- Ideally located at a horizontal distance of 4 times the height, above the rain gauge, of the nearest obstruction.
- Ensure the rain gauge is mounted level to the ground, away from any horizontal surface that can introduce rain-splashing or surrounding snow buildup.

4.2 Wireless Anemometer package assembly

See Figure 5 to locate and understand all the parts of the wireless anemometer package with UV & light sensors, once fully assembled.

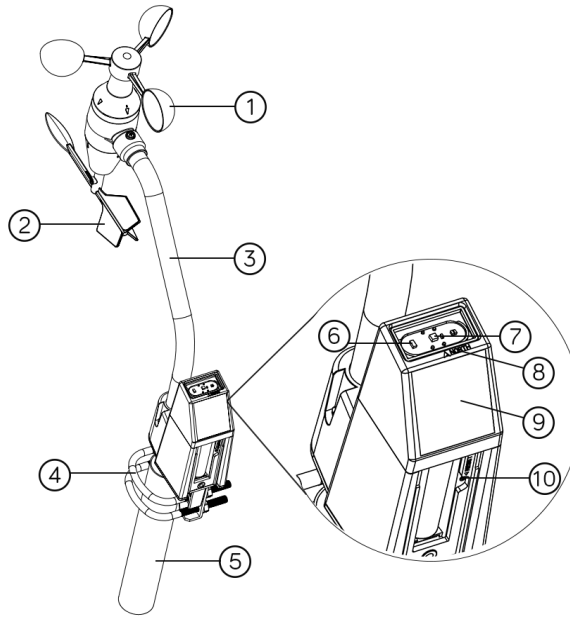

Figure 5: Sensor package assembly components

1. Anemometer cups	6. LED (red) indicating data transmission
2. Wind vane	7. Light sensor and UV sensor
3. Connection tube	8. NORTH alignment indicator
4. U-Bolts (2)	9. Solar panel
5. Mounting pole (not included)	10. Reset button

Table 2: Sensor package assembly component list

4.2.1 Install U-bolts and metal plate

Installation of the U-bolts, which are in turn used to mount the sensor package on a pole, requires installation of an included metal plate to receive the U-bolt ends. The metal plate, visible in Figure 6, has four holes through which the ends of the two U-Bolts will fit. The plate itself is inserted in a groove on the right bottom of the unit. Note that one side of the plate has a straight edge (which goes into the groove), the other side is bent at a 90-

degree angle and has a curved profile (which will end up “hugging” the mounting pole). Once the metal plate is inserted, remove nuts from the U-Bolts and insert both U-bolts through the respective holes of the metal plate as shown in Figure 6.

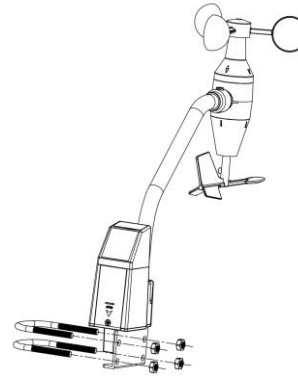

Figure 6: U-Bolt installation

Loosely screw on the nuts on the ends of the U-bolts. You will tighten these later during final mounting. Final assembly is shown in Figure 7.

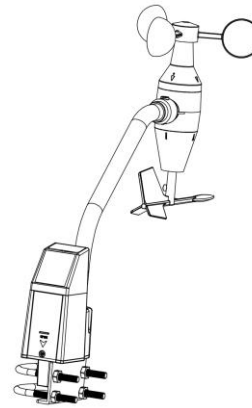

Figure 7: U-Bolts and nuts installation

The plate and U-Bolts are not yet needed at this stage but doing this now may help avoid damaging wind vane and wind speed cups later on. Handling

of the sensor package with wind vane and speed cups already installed to then install these bolts is more difficult and more likely to lead to damage.

4.2.2 Install wind vane

Push the wind vane onto the shaft on the bottom side of the sensor package, until it goes no further, as shown on the left side in Figure 8. Next, tighten the set screw, with a Philips screwdriver (size PH0), as shown on the right side, until the wind vane cannot be removed from the axle. Make sure the wind vane can rotate freely. The wind vane's movement has a small amount of friction, which is helpful in providing steady wind direction measurements.

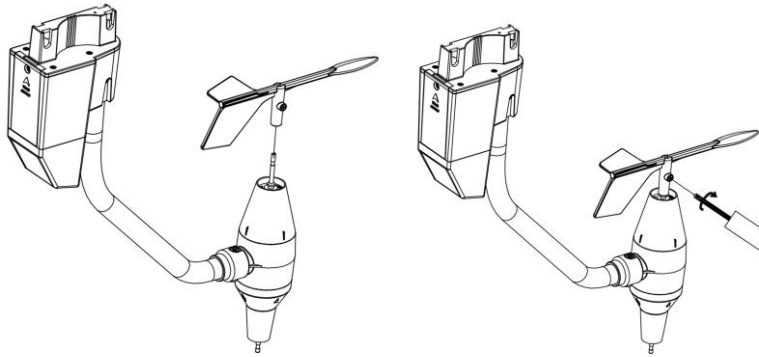

Figure 8: Wind vane installation diagram

4.2.3 Install anemometer cups

Push the wind speed cup assembly onto the shaft on the opposite side of the wind vane, as shown in Figure 9 on the top side. Tighten the set screw, with a Philips screwdriver (size PH0), as shown on the right side. Make sure the cup assembly can rotate freely. There should be no noticeable friction when it is turning.

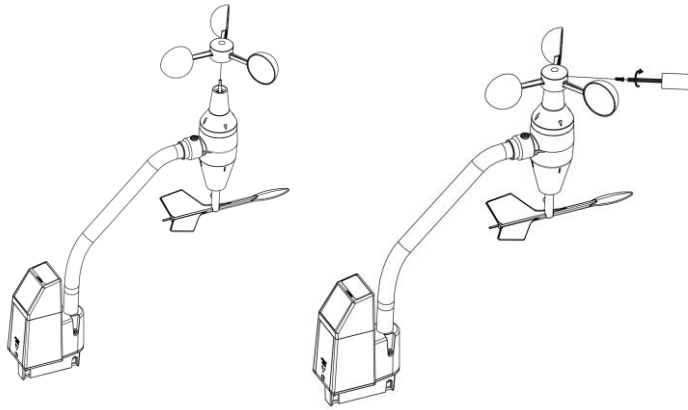

Figure 9: Wind speed cup installation diagram

4.2.4 Install batteries in sensor package

Open the battery compartment with a screwdriver and insert 1 AA battery in the battery compartment. The LED indicator on the back of the sensor package (item 6) will turn on for 3 seconds and then flash once every 16.5 seconds indicating sensor data transmission. If you did not pay attention, you may have missed the initial indication. You can always remove the batteries and press the reset button to start over. Make sure you see the flash once every 16.5 seconds.

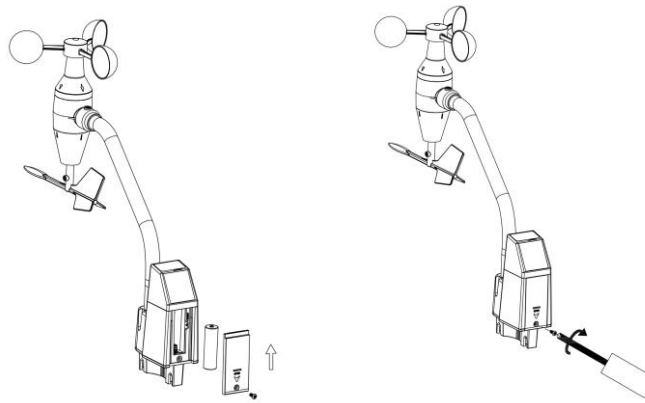

Figure 10: Battery installation diagram

Note: If LED does not light up or is on permanently, make sure the battery is inserted the correct way and inserted fully, starting over if necessary. Do not install the battery backwards as it may permanently damage the outdoor sensor.

Note: We recommend Lithium batteries for cold weather climates, but alkaline batteries are sufficient for most climates. Rechargeable batteries have lower voltages and should never be used.

4.2.5 Mount wireless anemometer assembly

4.2.5.1 Before you mount

Before proceeding with the outdoor mounting detailed in this section, you may want to skip to setup instructions in section 5-7 and onwards first, while you keep the anemometer sensor nearby (although preferably not closer than 5 ft. or 1.5 m from the display console). This will make any troubleshooting and adjustments easier and avoids any distance or interference related issues from the setup.

After setup is complete and everything is working, return here for outdoor mounting. If issues show up after outdoor mounting they are almost certainly related to distance, obstacles etc.

4.2.5.2 Mounting

- You can attach a pole to a permanent structure and then attach the sensor package to it (see Figure 11).
- The U-Bolts will accommodate a pole diameter of 1-2 inches (pole not included).

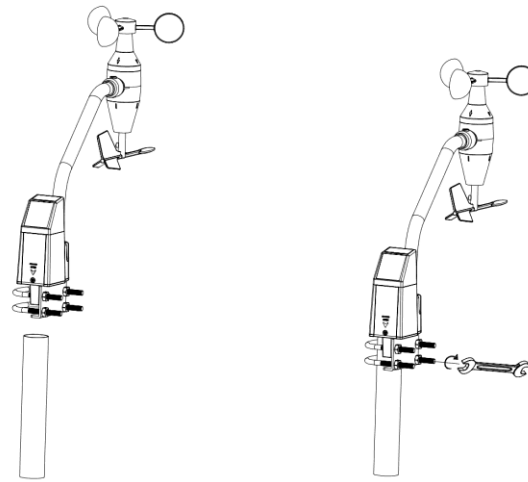

Figure 11: Sensor package mounting diagram

Make sure the mounting pole is vertical, or very close to it. Use a level as needed.

Finally, place the sensor package on top of the prepared mounting pipe. The U-Bolts should be loose enough to allow this but loosen the nuts as necessary. Once placed, hand tighten all four nuts, taking care to do so evenly. Do not use a wrench yet!

Now you will need to align the whole package in the proper direction by rotating it on top of the mounting pipe as needed. Locate the arrow labeled "NORTH" that you will find on top of the transparent cover on the sensor package (item 8). You must rotate the whole sensor package until this arrow points due north. To achieve proper alignment, it is helpful to use a compass (many cell phones have a compass application). Once rotated in the correct orientation, lightly tighten the bolts a little more (use a wrench) to prevent further rotation.

Note: The orientation to NORTH is necessary for two reasons. The most important one is to position the solar panel and light sensor in the most advantageous position for recording solar radiation and charging internal

capacitors. Secondly it causes a zero reading for wind direction to correspond to due NORTH, as is customary.

Note: When installing in a location on the southern hemisphere, the north indicator should actually be made to point due south so that the solar panel will receive optimal sunlight. Without correction this will cause wind directions to be opposite from what is expected. Use the mobile applications calibration functions to give the wind direction a 180-degree offset to compensate for this.

Make sure the mounting tube for the sensor package is installed vertically (use a level at 90-degree offsets around the tube). Adjust the mounting pipe as necessary. Next also make sure the mounting of the anemometer body on the pipe is level. If it is not, wind direction and speed readings may not operate correctly or accurately. Adjust the mounting assembly as necessary.

Make sure you check, and correct if necessary, the north orientation again, as the final installation step, and now tighten the bolts with a wrench. Do not over tighten, but make sure strong wind and/or rain cannot move the sensor package.

4.2.6 Reset Button and Transmitter LED

In the event the sensor package is not transmitting, reset the sensor.

Using a bent-open paperclip, press and hold the RESET BUTTON (item 10) to affect a reset: the LED turns on while the RESET button is depressed, and you can now let go. The LED should then resume as normal, flashing approximately once every 16.5 seconds.

4.3 Rain Gauge Sensor Set Up and Installation

See Figure 12 to locate and understand all the parts of the rain gauge sensor once fully assembled.

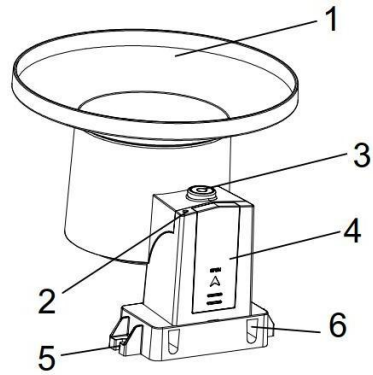

Figure 12: Sensor assembly components

1	Rain collector top	4	Battery compartment door
2	LED Indicator	5	Surface installation screw hole
3	Bubble level	6	U-bolt installation hole

Table 3: Sensor assembly detailed items

4.3.1 Install rain gauge filter

There’s a stainless steel filter included in the package. It’s aimed to stop leaves or bird's dropping to avoid the obstruction of the cone hole. The installation is as simple as the below figures show:

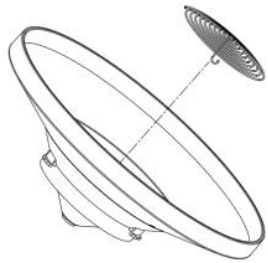

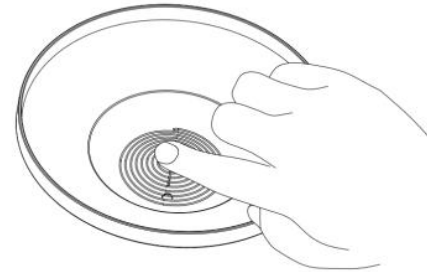

Hook the filter hook on the edge of the rain collector to install the filter(as the figure below shows on the left).

Take out the filter hook from the edge to uninstall the filter(as the figure 2 shows on the right).

Hook the filter hook on the edge to install

Take out the filter hook from the edge to uninstall

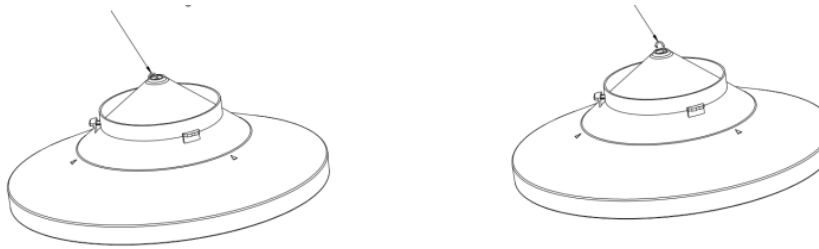

Figure : Rain gauge filter in/un-installation diagram

4.3.2 Install rain collector top

Align the rain collector top with the rain bucket, pay attention to the lock groove position as shown on the left side in Figure 13. Next, lock the top clockwise to the lock groove position, as shown on the right side of the figure, until it comes to a stop and the top cannot be removed from the bucket. Failure to do this may cause the collector top to blow away in strong winds!

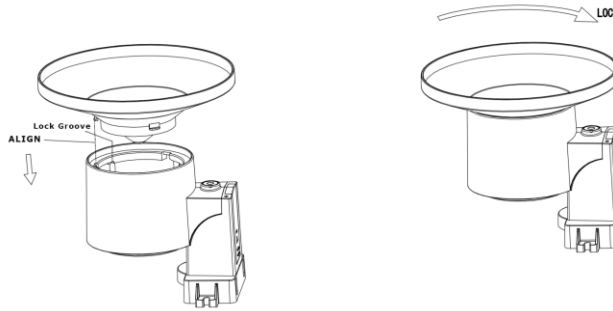

Figure 13: Rain collector top installation diagram

4.3.3 Install Batteries in rain gauge sensor

Remove the battery door on the back of the sensor by sliding it in the direction of the arrow. Insert one AA battery as described and put compartment door back and slide it in the opposite direction to lock.

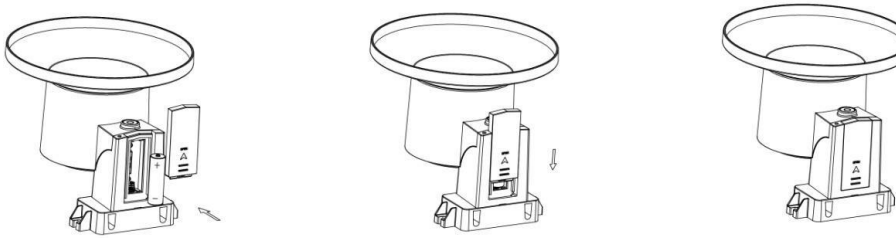

Figure 14: Rain gauge sensor battery installation diagram

The LED indicator on the top of the battery door (item 2) will turn on for 4 seconds and then flash once every 49 seconds indicating sensor data transmission. If you did not pay attention, you may have missed the initial indication. You can always remove the batteries and start over, but if you see the flash once every 49 seconds, everything should be OK.

Note: If no LED light up or is lighted permanently, make sure the battery is inserted the correct way or a proper reset is happened. Do not install the batteries backwards. You can permanently damage the outdoor sensor.

Lithium batteries are recommended for the best performance. We do not recommend rechargeable batteries. They have lower voltages, do not operate well at wide temperature ranges, and do not last as long, resulting in poorer reception.

4.3.4 Mounting

4.3.4.1 Before you mount

Before proceeding with the outdoor mounting detailed in this section, you may want to skip to setup instructions in section 5-7 and onwards first, while you keep the assembled rain gauge sensor nearby (although preferably not closer than 5 ft. from the display console). This will make any troubleshooting and adjustments easier and avoids any distance or interference related issues from the setup.

After setup is complete and everything is working, return here for outdoor mounting. If issues show up after outdoor mounting they are almost certainly related to distance, obstacles etc.

4.3.4.2 Mounting with U-bolts

The mounting assembly includes two U-Bolts and a bracket that tightens around a 1-2" diameter pole using the four U-Bolt and nuts. The package includes a D32/H200 (diameter 32mm = 1.26”, length 200mm = 7.87”) stainless steel tube for this purpose.

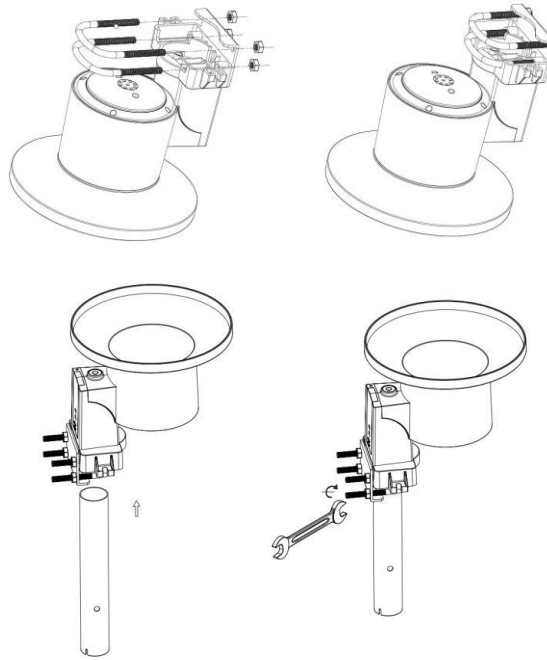

Figure 15: Rain gauge installation with U-bolts

Note: Use the bubble level one the side of the rain gauge as a guide to verify that the sensor is leveled (for proper measurements).

4.3.4.3 Mounting with screws

The mounting assembly also includes two screws for installation on a flat surface.

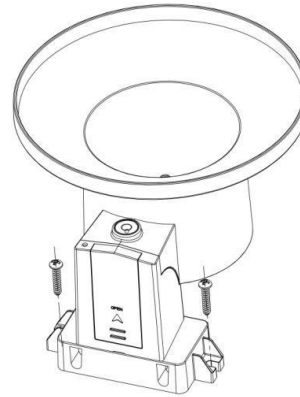

Figure 16: Rain gauge sensor mounting with screws installation diagram

Note: Use the bubble level beside the rain sensor as a guide to verify that the sensor is levelled. Use shims as necessary to achieve level installation.

4.4 Outdoor Temperature and Humidity Sensor Set Up

Note: To avoid permanent damage, please take note of the battery polarity before inserting the batteries. Looking at Figure 17 from left to right the left-most (or bottom) battery is to be installed with its + terminal pointing down, and the other battery with its + terminal pointing up.

Remove the battery door on the back of the sensor by sliding it in the direction of the arrow. Insert two AA batteries as described and put compartment door back and slide it in the opposite direction to lock.

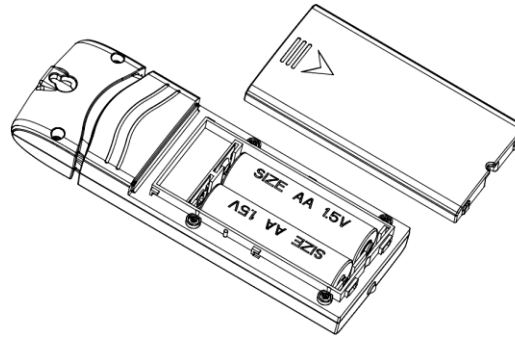

Figure 17: Indoor sensor battery installation

4.4.1 Sensor Placement

The best mounting location for this sensor is in a location that never receives direct sunlight, not even through windows. Also, do not install in a location where a nearby radiant heat source (radiator, heaters, air-conditioning compressor etc.) will affect it. Direct sunlight and radiant heat sources will result in inaccurate temperature readings. Also avoid locations where stagnant air can be trapped.

The sensor is meant to provide outdoor conditions for display on the app or website. The unit is weatherproof, but besides heeding the placement instructions above, you should also attempt to mount the unit under cover (eve or awning or similar) or install it with a solar radiation shield (optional).

To mount or hang the unit on a wall or wood beam:

- Use a screw or nail to affix the remote sensor to the wall, as shown on the left side of Figure 18, or
- Hang the remote sensor using a string, as shown in right side of Figure 18

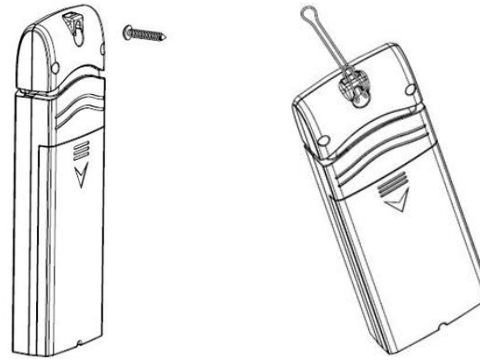

Figure 18: Indoor sensor mounting

Note: Make sure the sensor is mounted vertically and not lying down on a flat surface. This will insure optimum reception. Wireless signals are impacted by distance, interference (other weather stations, wireless phones, wireless routers, TVs and computer monitors), and transmission barriers, such as walls. In general, wireless signals will not penetrate solid metal and earth (down a hill, for example).

4.5 Best Practices for Wireless Communication

Wireless (RF) communication is susceptible to interference, distance, walls and metal barriers. We recommend the following best practices for trouble free wireless communication between both sensor packages and the console:

- **Indoor/outdoor sensor placement:** The sensor will have the longest reach for its signal when mounted or hung vertically. Avoid laying it down on a flat surface.
- **Electro-Magnetic Interference (EMI)**. Keep the console several feet away from computer monitors and TVs.
- **Radio Frequency Interference (RFI).** If you have other devices operating on the same frequency band as your indoor and/or outdoor sensors and experience intermittent communication between sensor package and console, try turning off these other devices for troubleshooting purposes. You may need to relocate the transmitters or receivers to avoid the interference and establish reliable communication.

The frequencies used by the sensors are one of (depending on your location): 433, 868, or 915 MHz (915 MHz for United States).

- **Line of Sight Rating.** This device is rated at 300 feet line of sight (under ideal circumstances; no interference, barriers or walls), but in most real-world scenarios, including a wall or two, you will be able to go about 100 feet.
- **Metal Barriers.** Radio frequency will not pass through metal barriers such as aluminum siding or metal wall framing. If you have such metal barriers and experience communication problems, you must change the placement of sensor package and or console.

The following table shows different transmission media and expected signal strength reductions. Each “wall” or obstruction decreases the transmission range by the factor shown below.

Medium	RF Signal Strength Reduction
Glass (untreated)	5-15%
Plastics	10-15%
Wood	10-40%
Brick	10-40%
Concrete	40-80%
Metal	90-100%

Table 4: RF Signal Strength reduction

4.6 Wi-Fi Gateway Introduction

See Figure 19 to help you identify elements of the gateway.

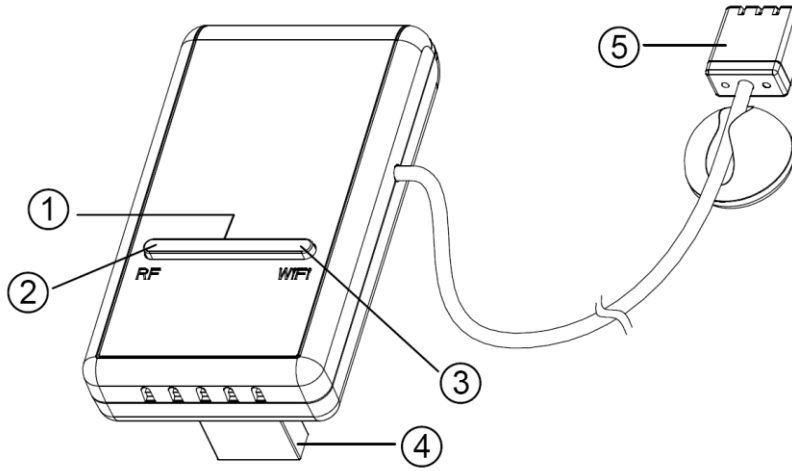

Figure 19: Gateway Introduction

1	Wi-Fi Configure/Reset Button
2.	RF Status Indicator Light (Blue)
3.	Wi-Fi Status Indicator Light (Red)
4.	USB Connector for system power supply
5.	Temperature, humidity and barometric 3-in-1 sensor

Table 5: Gateway parts identification

Before configuring the gateway with the mobile application, please read the description of the LED indicators (Items 2 and 3) and button (item 1) function for better understanding.

4.6.1 LED Indicators

RF (Blue): Indicates the status of RF communication with the station.

- **Flash** (each): indicates one packet of RF data from a sensor was received.
- **Off** (steady): indicates no RF data received.

Wi-Fi (Red): Indicates the status of the Wi-Fi connection.

- **On** (steady): indicates connected to Wi-Fi network; network communication normal and data uploaded to configured weather service(s) successfully.
- **Off** (steady): Wi-Fi connection failed.
- **Flash** (slowly), indicates connected to Wi-Fi network; network communication normal, but upload to one or more configured weather services failed. First confirm Internet access through your router is functioning, and then check whether the upload server account and password are correct (use WS View application).
- **Flash** (rapidly), indicates that Wi-Fi configuration mode is active. Use the WS View mobile application to complete the configuration.

4.6.2 Button functions

The black button is used for the following two modes:

Wi-Fi Configure Mode: Press and hold the button for about 5 seconds until the Wi-Fi status LED is flashing rapidly, indicating the gateway is ready for Wi-Fi configuration.

Reset Mode: Hold the black button for about 10 seconds till the red light and blue light flash simultaneously for three times will reset the gateway to factory settings. The history data, Wi-Fi settings, calibration etc. are all lost and need to be setup again via WS View app.

Note:

1. When powered up, and when there is no valid Wi-Fi configuration (including very first time), the Wi-Fi status LED will be rapidly flashing. It means that the gateway is in the Wi-Fi configuration mode. Use the mobile application to complete the configuration process.

2. If you purchased optional sensor(s), you may power up the new sensor at any time and use mobile application's live data view to confirm whether the sensor has been added successfully. If this does not appear the case, also check the **Sensors ID** page to see if the sensor's ID has been registered.

5 Publish to Internet Weather Services

The mobile application (WS View) can retrieve data from your gateway if it can reach the network where your gateway is located (in most cases that means it needs to be on the same Wi-Fi network). The gateway can also send your sensor data to select (configured) internet-based weather services. The supported services are shown in the table below:

Service	Description
Weather Underground	Site: https://wunderground.com provides local & long-range weather forecasts, weather reports, maps & tropical weather conditions for locations worldwide.
WOW	Site: https://wow.metoffice.gov.uk A UK based weather observation website.
Weather Cloud	Site: https://weathercloud.net A large network of weather stations reporting data in real time from all over the world.
Ecowitt Weather	Site: https://www.ecowitt.net Ecowitt's new weather server that can host a bunch of sensors that other services don't support at this time.

Table 6: Supported weather services

5.1 Gateway Wi-Fi Configuration

The gateway can function as an independent Wi-Fi access point during Wi-Fi configuration. This will be used to allow your mobile application to connect to it directly during configuration (temporarily), passing configuration information about your normal Wi-Fi network to the Gateway so that it can later connect to your preferred Wi-Fi network.

Please follow the following procedure:

1. Download the mobile application **WS View** from the iOS App Store or Google Play store, as appropriate for your device.
2. Plug your gateway into an available USB port that supplies power and ensure it is in Wi-Fi configuration mode (RED LED flashing fast). If it is not, follow the procedure to put it in that mode (hold down button for about 5 seconds).
3. Start the application and make sure the location permission function is granted (on) when you are running the app for the first time. In case you disabled the location access function for this application, please go to your mobile device settings page and configure it as “on”. The application needs your location to configure weather services.
4. Press “Configure New Device”. This may be automatic on the very first use of the application.
5. Tap on the appropriate device type and select “Next”. Follow the prompts.

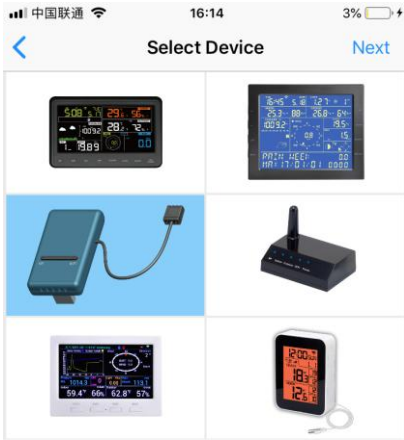

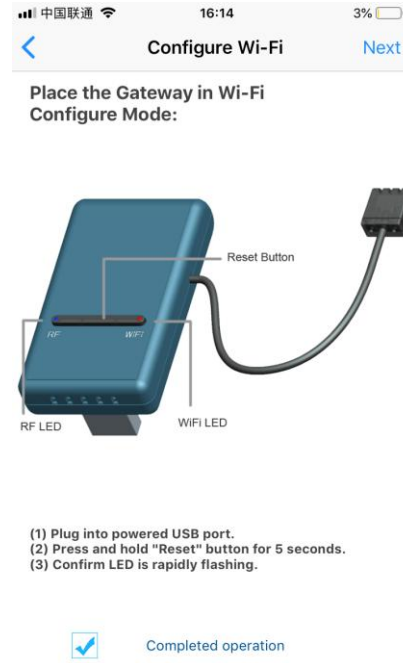

Figure 20: Configure screen

6. Confirm Wi-Fi configuration mode is active, as prompted. Correct if necessary (see above). Press “Next”.
7. Enter your preferred Wi-Fi SSID (network name) and security password. Press “Next”. This will be communicated to the gateway in a later step.
8. Now switch your mobile device to the ad-hoc Wi-Fi network created by your gateway. It will be named something like “GW1000-WIFI” followed by some numbers. Wait until connected. You may see a message such as “Unsecured Network” and “No Internet connection”: this is normal and can be ignored.
9. Return to the mobile application. The connection should be recognized, and you should see a few messages about connecting to the gateway and configuring it. The RED LED on the gateway should now no longer be flashing red.
10. Your mobile device should have been returned to your normal Wi-Fi network setting and the “Live Data” screen should be providing a read-out of your sensors.

Figure 21: Live Data screen

Note: If it displays a blank screen on the Device List instead of the "Live Data" screen, please check the following:

- Wait for 1-2 minutes and check whether the device will appear and go to the "Live Data" screen.
- If the Device List still shows blank, check whether your mobile device has been returned to your normal Wi-Fi network setting. If not, change it manually.
- Check whether you have used the 2.4GHz band Wi-Fi network only (dual band is not supported)

- Try to turn off your mobile data/cellular data.
- Exit the app and close all the applications in process, then reopen the WS View app and back to the Device List
- If still not work, contact the customer service for support

Note: the above and after figures are all from the iOS version application. The operations are almost the same on both Android version and iOS version.

11. Check the data quality and make sure sensor(s) are properly detected by the gateway.
12. With your obtained sensor ID or MAC address, register your device on the dedicated weather service you submitted.
13. If you register with WU, the current day history data can be viewed on WS View app.

5.2 Adding weather services

You may have configured weather services during the initial configuration, or you may do so later. To do so, open the mobile application and select your gateway from the device list. This will bring you to the “Live Data” screen for the gateway.

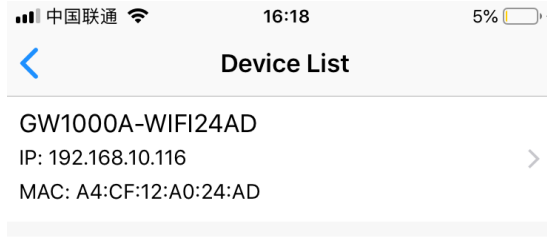

Figure 20: Device List screen

On the “Live Data” screen, press the “More” button in the upper right and select “Weather Services” from the menu.

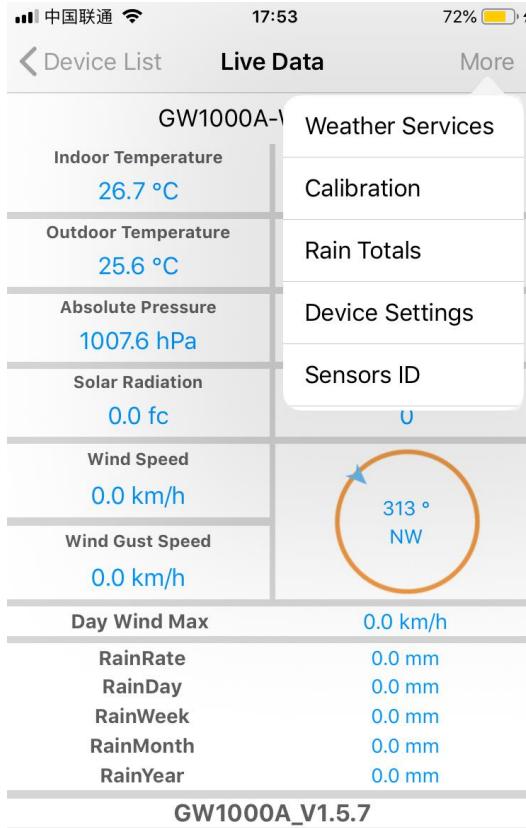

Figure 21: Live Data screen with settings menu

Navigate to the weather service you wish to configure by pressing “Next” and enter the appropriate data.

Figure 22: Weather Services uploading setting screen

5.3 Ecowitt Weather

It's recommended to use the Ecowitt Weather server to monitor and record your sensors' data. Configure as follows:

- On the ecowitt.net uploading page, enable the ON button (displayed blue) and set the uploading interval time.
- Copy the MAC address (will be used to add the device on the server later)
- Press Save on the page.
- Press “Register at ecowitt.net” and finish the registration on the page.
    - Press the upper left menu button and select Devices.
    - Press Add Device and input all the information needed.
    - Press Save.
    - Press Dashboard on the menu. Your sensor data would be available on the dashboard within several minutes.

Note: When select device address on map, please wait until the map displays before selecting your address.

You may add a shortcut to the ecowitt.net website on the home page of your phone so that you can visit it just like opening an app.

5.3.1 Viewing data on ecowitt.net

You can observe your sensor’s data by using the ecowitt.net web site. You will use a URL like this one, where your station ID replaces the text “STATIONID”.

https://www.ecowitt.net/home/index?id=STATIONID

Note: If you want to share your station data with other users, you’ll need to set your data to be public. Other users need to log in the ecowitt.net first to view your data.

It will show a page such as this, where you can look at today’s data and historical data as well.

Dashboard

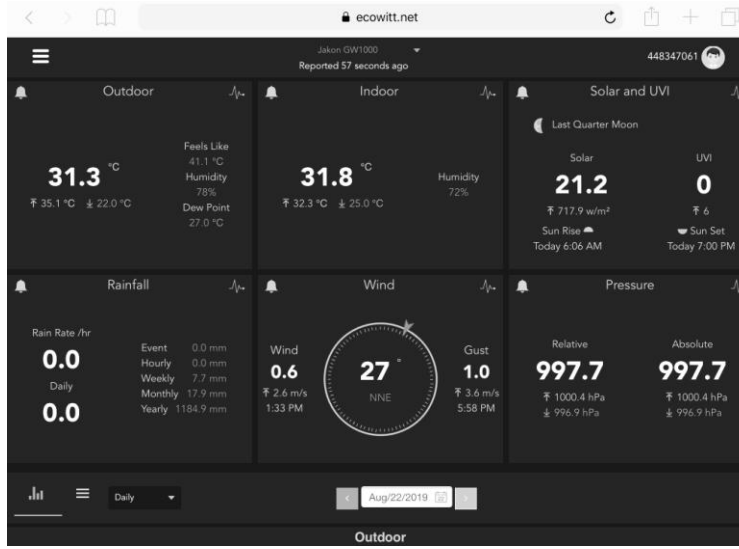

Graph display

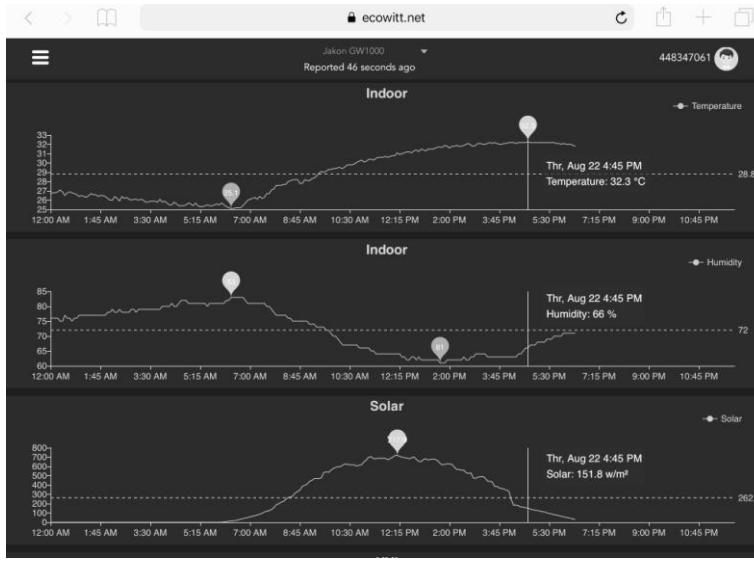

List display

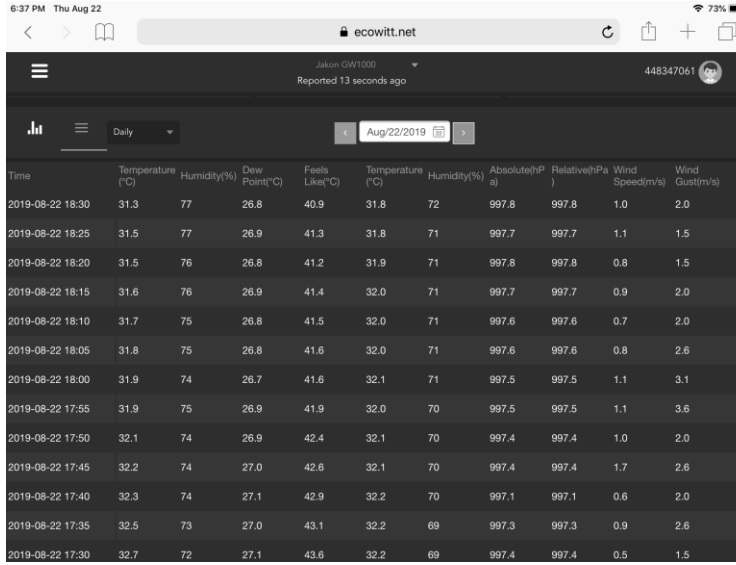

Time	Temperature (°C)	Humidity(%)	Dew Point(°C)	Feels Like(°C)	Temperature (°C)	Humidity(%)	Absolute(hPa)	Relative(hPa)	Wind Speed(m/s)	Wind Gust(m/s)	Wi Dir
2019-08-22 18:30	31.3	77	26.8	40.9	31.8	72	997.8	997.8	1.0	2.0	4
2019-08-22 18:25	31.5	77	26.9	41.3	31.8	71	997.7	997.7	1.1	1.5	2
2019-08-22 18:20	31.5	76	26.8	41.2	31.9	71	997.8	997.8	0.8	1.5	3
2019-08-22 18:15	31.6	76	26.9	41.4	32.0	71	997.7	997.7	0.9	2.0	2
2019-08-22 18:10	31.7	75	26.8	41.5	32.0	71	997.6	997.6	0.7	2.0	3
2019-08-22 18:05	31.8	75	26.8	41.6	32.0	71	997.6	997.6	0.8	2.6	2
2019-08-22 18:00	31.9	74	26.7	41.6	32.1	71	997.5	997.5	1.1	3.1	8
2019-08-22 17:55	31.9	75	26.9	41.9	32.0	70	997.5	997.5	1.1	3.6	7
2019-08-22 17:50	32.1	74	26.9	42.4	32.1	70	997.4	997.4	1.0	2.0	5
2019-08-22 17:45	32.2	74	27.0	42.6	32.1	70	997.4	997.4	1.7	2.6	1
2019-08-22 17:40	32.3	74	27.1	42.9	32.2	70	997.1	997.1	0.6	2.0	2
2019-08-22 17:35	32.5	73	27.0	43.1	32.2	69	997.3	997.3	0.9	2.6	6
2019-08-22 17:30	32.7	72	27.1	43.6	32.2	69	997.4	997.4	0.5	1.5	5

Weather Map

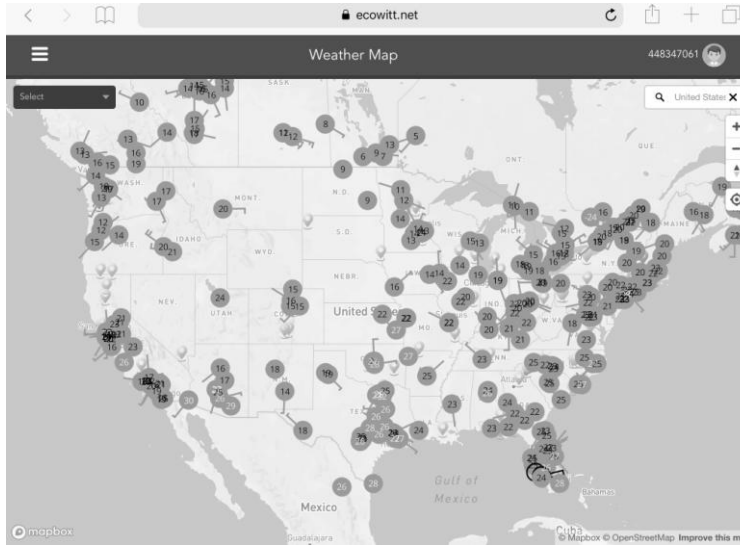

Email Alerts

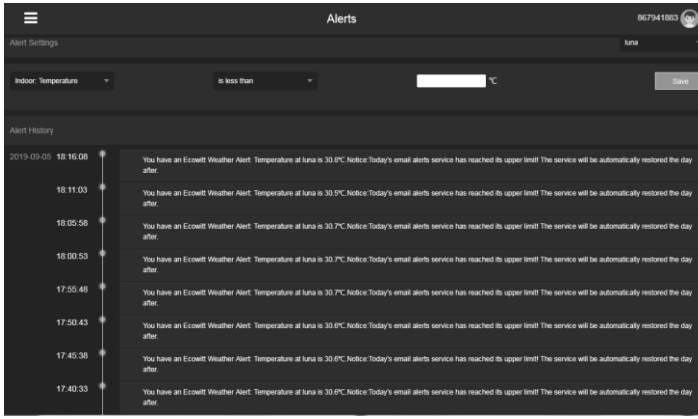

5.4 Weather Underground

If you are planning to use wunderground.com you must have an account and register a (new) personal weather station. You may do so on the Wunderground uploading page in the WS View application:

- Press Register at Wunderground.com and finish the registration on the page (you may choose “other” when selecting device hardware).
- Take note of the PWS identifier (ID) and the password that will be generated for you.
- Back to the app and input the Station ID and Key.
- Press Save.
- Back to the Menu page and select WU Dashboard. You’ll see the current WU data, including graphs on the “WU Dashboard” screen within hours.

To add additional WU stations, please follow this procedure:

- Press “Menu” icon (upper left) and choose Manage Wunderground.
- Press “Add WU Station ID” to add a new station, The next screen will let you enter the appropriate information.
- You may also press the “Delete” button next to a specific station to remove it.

5.4.1 WU Dashboard vs Live Data

You should be aware that the information presented on weatherunderground.com represents the latest as seen by WU (from the last successful upload), and may not be identical what is on your live data screen!

Here is a short explanation of differences:

Live Data is obtained by the mobile app by connecting directly to the gateway. This can only happen when your mobile device and gateway are connected to the same Wi-Fi network. It will then show up after you select “Device List” from the main settings menu. If your mobile device is in another network, no device(s) will show up in this list and you will not be able to select a device for displaying the “Live Data” screen.

WU Dashboard shows the data obtained from WU server. This requires that your mobile device can reach the Internet and therefore this is possible even when you are not on your home Wi-Fi network, such as when using cellular data.

5.5 Editing Rain totals

When on the “Live Data” screen, you can press the “More” button (upper right) to enter the calibration screen, or the rain totals screen.

When you select “Calibration” you can change sensor calibration values on the next screen(s).

If you select “Rain Totals” instead, you can edit the rain total for the current day, week, month, or year. This is useful when you start using this system instead of another one that has accumulated data, or simply if you know the values to be incorrect.

5.5.1 Calibration of barometric pressure settings.

Calibration of barometric pressure requires some additional understanding, which we will provide here. Also provided is a step by step procedure for calibrating correctly.

Absolute barometric pressure can be calibrated at manufacturing time by comparing with a precise instrument that measures pressure at the same location. In practice, sometimes small adjustments of a few hPa may be needed. The relative pressure represents what the air pressure would indicate if your station was at sea level and depends on the altitude of your gateway and cannot be known in advance. This is why it needs an adjustment.

There are different manners in which to handle this adjustment. We will outline a reliable procedure below, which requires adjusting both pressures. The method assumes that you have an official airport sufficiently nearby to act as a reliable reference. Usually distances of up to 25 miles work reliably, but this is not always true and depends on geography. We start by assuming that your station's absolute pressure reading is correct and needs no offset correction.

The procedure below assumes you are starting from the gateway's factory setting. With those settings, ABS and REL should, at this time, be displaying the same value. We also assume, for the moment, that ABS pressure is 100% correct.

1. For this procedure we will get the most precise results if our display for pressure is in hPa units. Even if you do not want to use those units eventually, set the app to use them for now.
2. Determine the altitude, or elevation above sea level, of your station's gateway. This measurement is necessary to account for the difference in air pressure caused by the elevation of your gateway. Elevation above sea level reduces the absolute pressure measured by your sensor. Determine this altitude using a GPS, or look it up using a tool such as this web site: https://www.freemaptools.com/elevation-finder.htm. You can input your location's GPS coordinates, or manipulate the map to your location. Click on "Estimate Elevation" and observe the result. For an example we will use a gateway location at 42 ft. above sea level.
3. This tool will provide the ground level elevation at your location, so you will need to add the right amount for how high above ground level your gateway is. If you are on a ground floor and have the gateway on a

desk, you'll have to add something like 3-4 ft. If you are using a GPS system that tells you elevation, make sure it is right next to the gateway and you'll be able to read the correct elevation right from the GPS results without further adjustment.

4. With the correct altitude/elevation in hand you will need to determine the correct offset. To be added to the absolute pressure reading in order to compute relative pressure (sea level equivalent). Correction tables can be found on-line in many places. One example is the table found at the web site at https://novalynx.com/manuals/bp-elevation-correction-tables.pdf.

   Locate your elevation in the first column and read the correction in the third column. This table, however is rather coarse, making it hard to be precise. An alternative is an on-line calculator such as the one found here:

   http://www.csgnetwork.com/barcorrecthcalc.html

   For our example of 42 ft. above sea level we input 42 ft. of elevation and a standard pressure of 1013.25 hPa/mb and press calculate. We find an "absolute barometer value" that should be -1.5626061222588443 hPa lower than at sea level. The inverse (because relative pressure is higher than absolute pressure) of this number will be our "REL PRESS OFFSET" value. Use the settings procedure to increase REL by +1.6 (nearest rounded value we can input).

5. Now we need a reliable reference for pressure at sea level. Locate the official identifier for the nearest airport. Refer to "World Airport Codes" at https://www.world-airport-codes.com or a similar reference. Enter your location or nearby airport name, and press "Search." Select the correct airport from your search results and click on it. For example, search for "Mountain View" and click on "Moffet Field."

6. From the resulting page find the ICAO code, if listed. Otherwise use the IATA code. For the example above, you would find IATA code "NUQ."

7. Now go to a web site like AVIATION WEATHER CENTER (for US locations) at https://www.aviationweather.gov/metar?gis=off and enter

the code you found in step 2, and click “Decoded” (to make the next step easier) before requesting the METAR information. For the example we would enter “KNUQ” and find a result output like: “30.09 inches Hg (1019.0 mb) [Sea level pressure: 1019.1 mb]”

8. Go to the calibration settings page and observe the “REL Barometer value (this is the value we just adjusted in step 4 above). Compare the REL value with the value from the airport. IN our example, the REL display was 1022.9 where we expected 1019.1. This then tells us that our displayed REL pressure is 1022.9 – 1019.1 = 3.8 hPa different from the reference source.
9. Since we assumed the absolute pressure measured was correct, and we presumably calculated the elevation related offset correctly, we must conclude that the absolute pressure was not correct after all. It appears to be 3.8 too high, so we’ll now enter a correction of -3.8 in the settings for “ABS Barometer” until it reads a value 3.8 hPa lower than before. This kind of correction is entirely normal as during manufacturing small shifts in the pressure sensor readings can be introduced.
10. For a more precise procedure, locate a very precise barometer that you can place right next to the gateway, you would adjust “ABS Barometer” until the ABS pressure reads identical. You would then still adjust “REL barometer” until it displays the value from the reference airport. This procedure would also produce the correct relative pressure, but due to a precise calibration of the absolute pressure, it too is correct.

The first procedure above generally works quite well, but for stations at fairly high altitudes (e.g. 5,000 ft. or higher) it may be more incorrect than at lower altitudes. In such cases comparisons with other known correct, and nearby at similar altitude, stations may help.

Now that calibration is complete, feel free to change the pressure units to whatever you like.

Note: Airport METAR data is often only updated every 10, 15 or even 30 minutes. If you use the information in the procedure above, you may be looking at pressure data that is out of date by as much as the update interval.

To get best results observe several times and figure out the update interval and then use two values for the procedure: one taken immediately after an update, another taken about halfway through the interval.

Note: It is also a good idea to observe some more after the calibration procedure is complete to make sure the numbers are correct.

5.6 Registering with and using wunderground.com

If you have not already done setup for wunderground.com during the Wi-Fi setup, you can do so later. Perform the following steps:

1. Visit Wunderground.com and click **Join** as the right top arrow indicates and select the **Sign up for free** option.

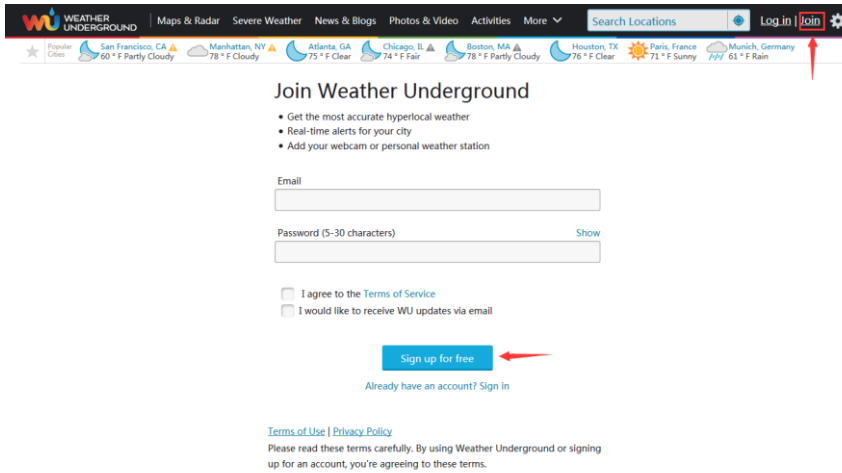

2. Click **More** and select **Add Weather Station** to register your station

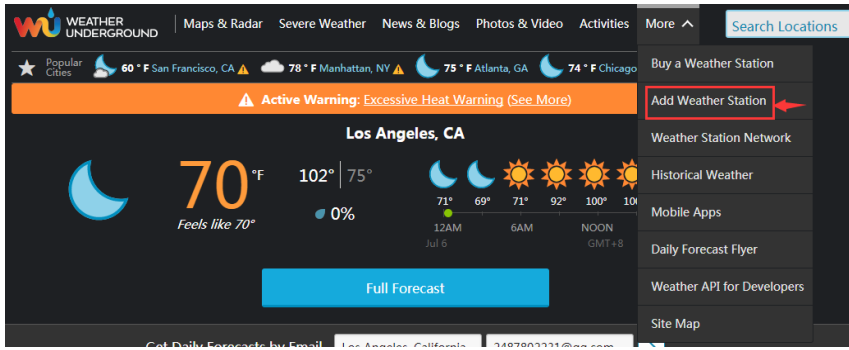

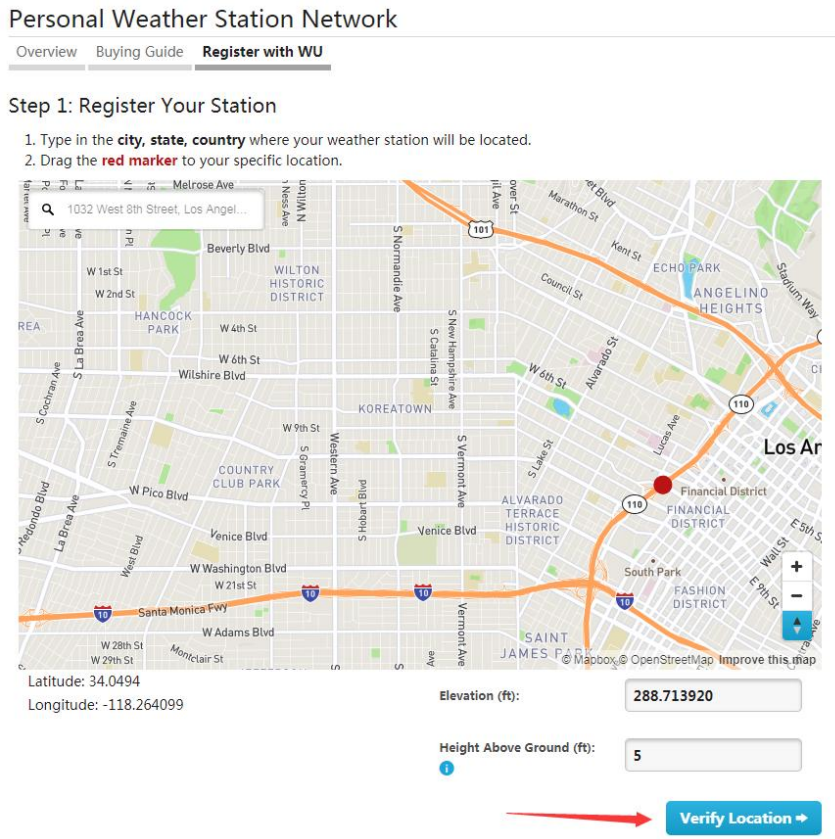

3. Click **verify location** and fill out the form.

After submitting the form, you will see the following:

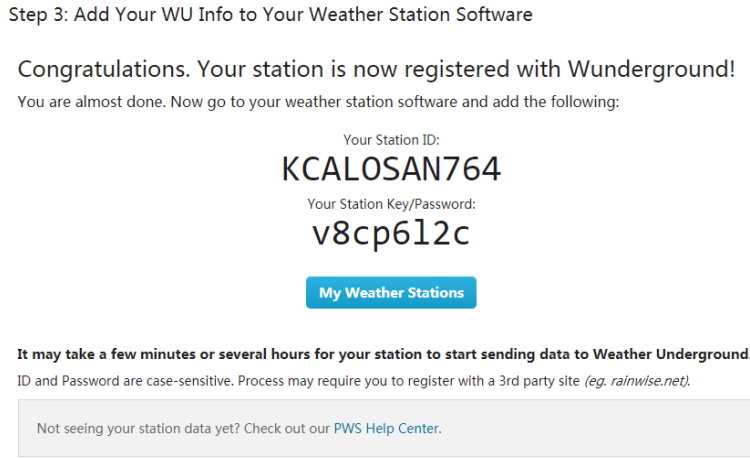

5.7 Device Settings

On the Live Data page, press “More” on the top-right, and select “Device Settings” to set the following:

- Select sensor type.
- Set time zone.
- Reboot Device.
- Reset to Factory Settings.

5.8 Sensor ID

On Live Data page, press More and select “Sensors ID” to set the following:

- View sensor ID, signal strength and battery power condition. 1-4 bars means 1-4 successful successive signal receptions without missed ones.
- Register the sensor when offline.
- Enable or disable the sensor.
- Input the Sensor ID when offline.

5.9 Viewing data on wunderground.com

You can also observe your weather station's data by using the wunderground.com web site. You will use a URL like this one, where your station ID replaces the text "STATIONID".

http://www.wunderground.com/personal-weather-station/dashboard?ID=STATIONID

It will show a page such as this, where you can look at today's data and historical data as well.

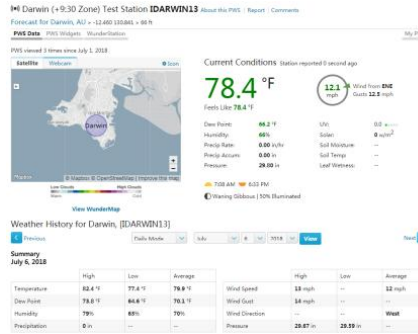

There are also some very useful mobile apps. The URLs provided here go to the Web version of the application pages. You can also find them directly from the iOS or Google Play stores:

- **WunderStation**: iPad application for viewing your station's data and graphs**:**
  https://itunes.apple.com/us/app/wunderstation-weather-from-your-neighborhood/id906099986

- **Weather Underground: Forecast**: iOS and Android application for forecasts

  https://itunes.apple.com/us/app/weather-underground-forecast/id486154808

  https://play.google.com/store/apps/details?id=com.wunderground.android.weather&hl=en

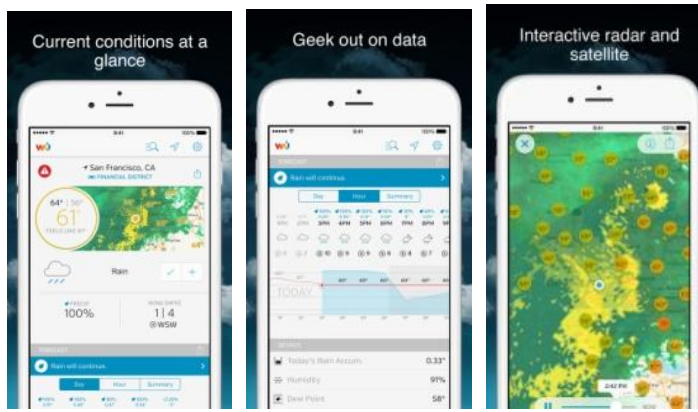

- **PWS Weather Station Monitor**: View weather conditions in your neighborhood, or even right in your own backyard. Connects to wunderground.com:

  https://itunes.apple.com/us/app/pws-weather-station-monitor/id713705929

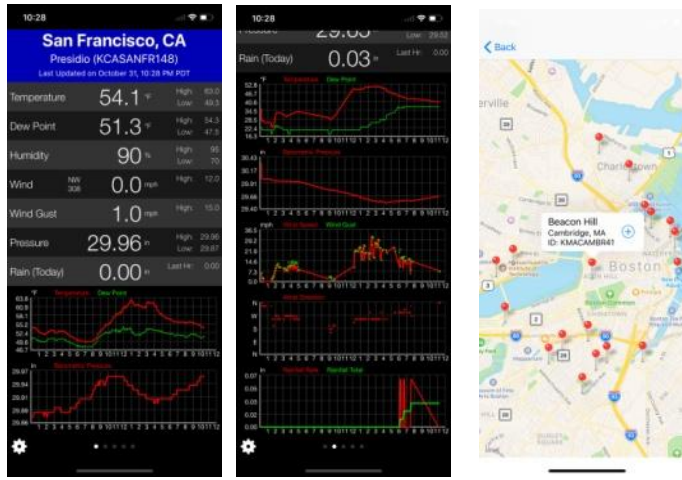

6 Maintenance

The following steps should be taken for proper maintenance of your station

Clean Rain Gauge

Check the rain gauge every 3 months. Rotate the funnel counterclockwise and lift it up. Clean the funnel and bucket with a damp cloth to remove any dirt, debris and insects. Spray the array lightly with insecticide, if there's a bug infestation.

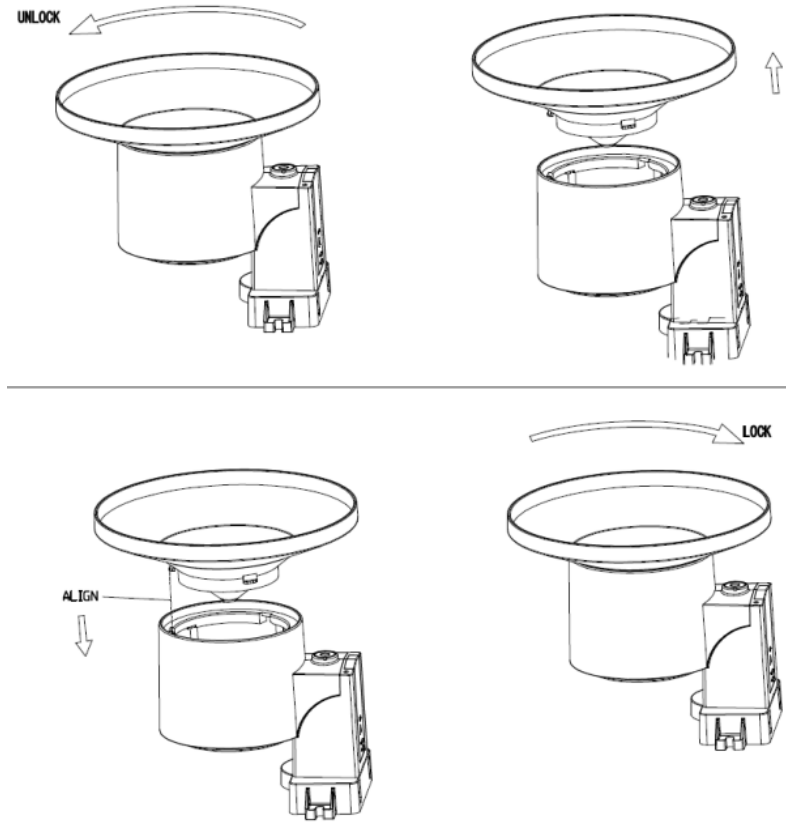

Figure 23: Rain gauge maintenance

Clean solar radiation sensor and solar panel

The solar radiation sensor and solar panel of the outdoor sensor array need to be cleaned with a non-abrasive slightly damp cloth every 3 months.

Replacing batteries regularly

Batteries of the outdoor sensor array should be replaced every 1-2 years. In applications where data dropouts cannot be tolerated, check the batteries every 3 months and apply a corrosion preventing compound (not included) on the battery terminals for protection.

Prevent snow build up

In snowy environments, use anti-icing silicon spray on the top of the weather station, and rain collection top, to prevent snow build up.

Rain Gauge Accuracy Cross Check

To tell if the rain gauge is accurate or not, it is not correct to compare to a rain meter nearby around. Because it is not necessary having a same rain intensity, even I they are not far from each other. To judge if your rain meter is correct or not, you may do the following:

1. Use a narrowed neck bottle that can sit under the rain gauge water outlet holes. Collect the water during a rain event and measure its weight. E.g. 353 g.
2. 353 g equals 353 ml, divided by rain collector size of 250 cm2, you get 353/250 = 1.412 cm = 14.1 mm.
3. Compare the rain readings from your gateway to your local rain event reading, or a reading from a calibrated manual gauge, to see if they are matching or not.
4. Since there may be some water left in the tip bucket, and also some on the rain collector itself, the observed rain is normally slightly less than the actual rainfall, but his is normally within 5%. If the deviation is larger than this, then you can change rain calibration settings accordingly, or contact the customer service for replacement.

7 Troubleshooting Guide

Look through the following table and locate an issue or problem you are experiencing in the left column and read possible solutions in the right column.

Problem	Solution
Outdoor sensor not reporting to base unit(gateway) Dashes (--) on the app or website	Check that the outdoor transmission LED is flashing normally. See **Sensor reporting interval** on Section 8. If the batteries were recently (re)placed, check correct polarity was used and/or reseat the batteries. If the batteries are old, replace them. If the LED is now flashing normally, proceed to the next step. If it is not flashing and you have repeated battery checks and placement, you may have a defective unit. Make sure the gateway is powered and the Wi-Fi light(red) lights on steady. Go to the Sensor ID page, find the offline sensor picture and press Re-register to register it.
Indoor and Outdoor Temperature do not agree during indoor testing	During installation testing it is useful to test with both indoor sensor and outdoor unit in the same room. Allow up to one hour for the sensors to stabilize and adjust to room temperature. The indoor and outdoor temperature sensors should agree within 4 ℉ (the sensor accuracy is ±2 ℉). If these values still disagree, use calibration offsets for one or both sensors (see section 5.5) to adjust to a known good reference temperature.
Indoor and Outdoor Humidity do not agree during indoor testing	The procedure here is that same as for outdoor/indoor temperature. The sensors should agree within 10 % (the sensor accuracy is ±5 %) If these values still disagree, use calibration offsets for one or both sensors (see section 5.5) to adjust to a known good reference humidity.

Problem	Solution
Relative pressure does not agree with official reporting station	Relative pressure refers to sea-level equivalent temperature and should generally agree closely with the official station. If there is a disagreement, make sure you are not looking at absolute pressure, in particular if your station is not near sea level. Also check at different times due to occasional delays in updates to the official station. Redo the pressure calibration procedure described in section 0. The barometer is only accurate to ±0.09 inHg (3 hPa) within the following relative pressure range: 20.67 to 32.50 inHg (700 – 1,100 hPa), which corresponds to an altitude of 9,000 ft. (2,750 m) down to 2,500 ft. (750 m) below sea level. At higher altitudes, you should expect a possible lesser accuracy and non-linearity effects in the error (the calibration offset only allows for a partially linear correction).
Time is incorrect	Make sure your time zone and daylight savings time setting is correct (even when connected to the Internet via Wi-Fi this is needed).
Data not reporting to Wunderground.com	Confirm your station ID is correct. The station ID is all caps, and the most common issue is substituting a capital letter O for a 0 (zero) or vice versa. Please note the digit 0 can only occur in the last part of the station ID (which is a station number in a city). Example, KAZPHOEN11, not KAZPH0EN11 If there's a number "1" on the station key, try to input the lower case of letter "L" to replace it on the app. Confirm that your password (also called: key) is correct. It is the password wunderground.com generated for your station ID. You can also verify it by logging in to wunderground.com and looking it up under “My PWS.” Make sure the date, time and time zone is correct on the WS View app. If it is not incorrect, you may be reporting data for a point in the past or future and you may not see it where you expect it. Check your router firewall settings. The gateway sends data via port 80. If you can access other web sites using “http” (not to be confused with “https”) this setting will be OK.

Problem	Solution
No Wi-Fi connection, or gateway configuration failed	Check for Wi-Fi light on the gateway. If wireless connectivity is operational, the Wi-Fi light will be steady. Make sure you configured the correct SSID and password. Repeat the procedure as necessary to verify. The gateway does not support so-called “captive Wi-Fi” networks. These are typically “guest” type networks where users have to agree to terms and conditions before being connected. Make sure your Wi-Fi supports 2.4 GHz signals (801 type B or G, or N) because Wi-Fi that uses the 5 GHz spectrum is **not supported**. Try alternative methods. **Method one:** 1. Power off the gateway and wait for several minutes. 2. Power on the gateway and hold the black button for 5s till the red LED flash fast. 3. Open the Wi-Fi network on your phone and connect to the hotspot of GW1000-WIFIXXXX. 4. Open the WS View app and click Configure New Device - select GW1000 - click Next 5. Follow the instructions on the app. **Method two:** 1. On a PC, go to our website 2. go to “Support” and click “MANUAL & SOFTWARE” 3. search for “GW1000” 4. download and install the “GW1000 Wi-Fi Configuration with PC Software” 5. Connect PC to the gateway’s Wi-Fi hotspot and use the software to configure the gateway. 6. Now use the mobile app and wait for the gateway to appear in the “Device List” **Method 3:** Reset your router or reset the gateway to factory mode and then try the configuration again **Method 4:**

Problem	Solution
	Try to set your router password to none and then do the configuration again. If successfully, you may set your router password back and configure the gateway again. **Method 5:** Try the configuration using a different mobile device. If still unsuccessfully, please contact our Customer Service Department via email: support@ecowitt.com or ecowittweather@outlook.com.

8 Specifications

Note: Out of range values will be displayed using "---"

Outdoor sensor	Specification
Transmission distance in open field	100 m (330 ft.)
RF Frequency	433 / 868 / 915 MHz depending on location United States: 915 MHz
Temperature range	-40 ℃ – 60 ℃ (-40 ℉ - 140 ℉)
Temperature accuracy	± 1 ℃, or ± 2 ℉
Temperature resolution	0.1 ℃, or 0.1 ℉
Humidity range	10% ~ 99%
Humidity accuracy	± 5%
Humidity resolution	1%
Rain volume display range	0 – 6000 mm
Rain volume accuracy	± 5%
Rain volume resolution	0.1mm/0.01inch
Wind speed range	0 – 50 m/s (0 ~ 100 mph)
Wind speed accuracy	± 1 m/s (speed < 5 m/s) ± 10% (speed ≥ 5 m/s), or ± 0.1 mph (speed < 11 mph) ± 10% (speed ≥ 11 mph)
UV-Index range	0 - 15
Light range	0 – 120 kLux
Light accuracy	± 15%
Sensor reporting interval	Anemometer: 16.5s; rain gauge sensor: 49s; thermo-hygrometer sensor: 64s

Table 7: Outdoor sensor specification

USB gateway built-in sensor	Specification
Temperature range	0 ℃ – 50 ℃ (32 ℉ - 122 ℉)
Temperature resolution	0.1 ℃, or 0.1 ℉
Humidity range	1% ~ 99%
Humidity resolution	1%
Barometric pressure range	300 – 1,100 hPa (8.85 – 32.5 inHg)
Barometric pressure accuracy	±3 hPa in 700 – 1,100 hPa range
Barometric pressure resolution	0.1 hPa (0.01 inHg)

Table 8: USB gateway built-in sensor specification

Power	Specification
USB gateway	5V DC
Outdoor thermo-hygrometer sensor	2 x AA 1.5 Alkaline batteries (not included)
Rain gauge sensor	1 x AA 1.5V Lithium battery (not included)
Anemometer sensor	Solar panel (built-in): 6.5V/4mA
Anemometer sensor (backup)	1 x AA 1.5V LR6 Alkaline (not included), or 1 x AA 1.5V Lithium battery (not included)

Table 9: Power specification

The primary power source for the anemometer sensor is the solar panel. When available solar power (light over recent period) is insufficient, the battery will be used. In outdoor climates that frequently have sustained temperatures below 0 ℃ (or 32 ℉) the use of Lithium batteries is strongly suggested as these are performing better than Alkaline batteries under such circumstances.

9 Warranty Information

We disclaim any responsibility for any technical error or printing error, or the consequences thereof.

All trademarks and patents are recognized.

We provide a 1-year limited warranty on this product against manufacturing defects, or defects in materials and workmanship.

This limited warranty begins on the original date of purchase, is valid only on products purchased, and only to the original purchaser of this product. To receive warranty service, the purchaser must contact us for problem determination and service procedures.

This limited warranty covers only actual defects within the product itself and does not cover the cost of installation or removal from a fixed installation, normal set-up or adjustments, or claims based on misrepresentation by the seller, or performance variations resulting from installation-related circumstances.